Parts list E 10	Code	
Outside basket	1801	
Inside basket	P1802	
Complete cover	1803	
Cover w/ o small cover, handle & gear	1804	
Handle only	1809	
Axle for outside basket	1810	
Small cover with handle & gear	1812	
Axle	1814	
Small cover (w/ o handle & drive gear)	2805	
Perforated drive gear + pin	2806	
Large gear	2807	
Small gear	2808	
Pin	2811	
Axle for drive & small gear	2813	
Set of gears (2806, 2807, 2808, 2811)	2815.1	
Handle screws (4)	9014	
Orange plastic nuts (4)	9014.P	
Stainless steel pins (M4x25) (4)	9014.G	

Parts list E 20	Code	
Outside basket	2801	
Inside basket	P2802	
Complete cover	2803	
Cover w/ o small cover, handle & gear	2804	
Small cover (w/ o handle & drive gear)	2805	
Perforated drive gear + pin	2806	
Large gear	2807	
Small gear	2808	
Handle only	2809	
Axle for outside basket	2810	
Pin	2811	
Small cover with handle & gear	2812	
Axle for drive & small gear	2813	
Axle	2814	
Set of gears (2806, 2807, 2808, 2811)	2815.1	
Handle screws (4)	9014	
Orange plastic nuts (4)	9014.P	
Stainless steel pins (M4x25) (4)	9014.G	

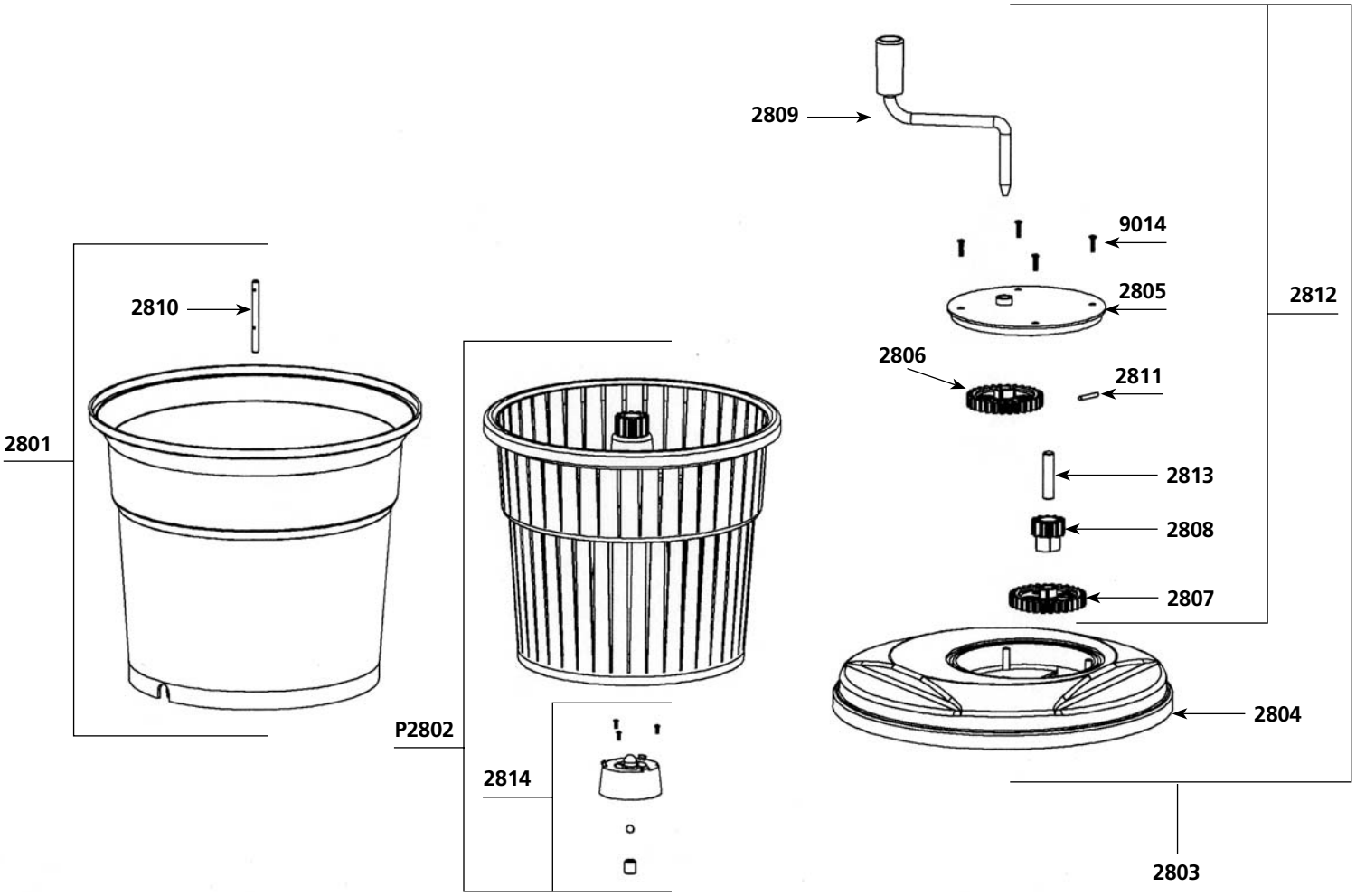

Tel. +33 (0)2 51 63 02 72
Fax +33 (0)2 51 63 02 73
www.dynamicmixers.com
E-mail: dynamic-france@wanadoo.fr

Manual salad spinner E 20 "Sealed cover"

Parts list	Code	
Waterproof seal 14 x 24 x 7	0644	
Waterproof seal 25 x 27 x 6	0645	
O. Ring	0646	
Screws TBF 3.9 x 14	079958	
Outside basket	2801	
Perforated drive gear + pin	2806	
Large gear	2807	
Small gear	2808	
Axle for outside basket	2810	
Pin for large gear	2811	
Axle for drive & small gear	2813	
Axle	2814	
Set of gears (2806, 2807, 2808, 2811, 2822)	2815.2	
Handle only	2820	
Small cover (w/ o handle & drive gear)	2821	
Output small gear	2822	
Equipped cover (O. Ring + Waterproof seal	2823	
Coupling sleeve	2824	
Inside basket	2825	
Small cover with handle & gear	2826	
Complete cover	2827	
Screws (4)	9014	

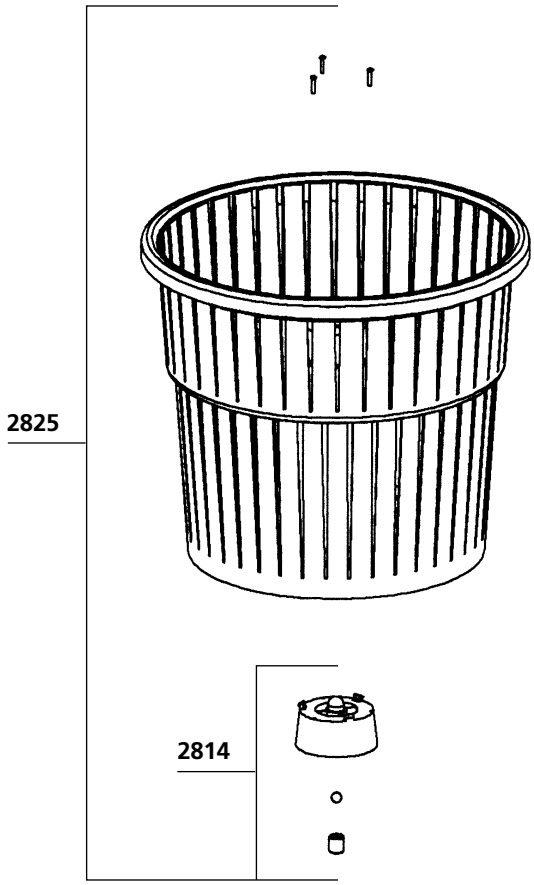

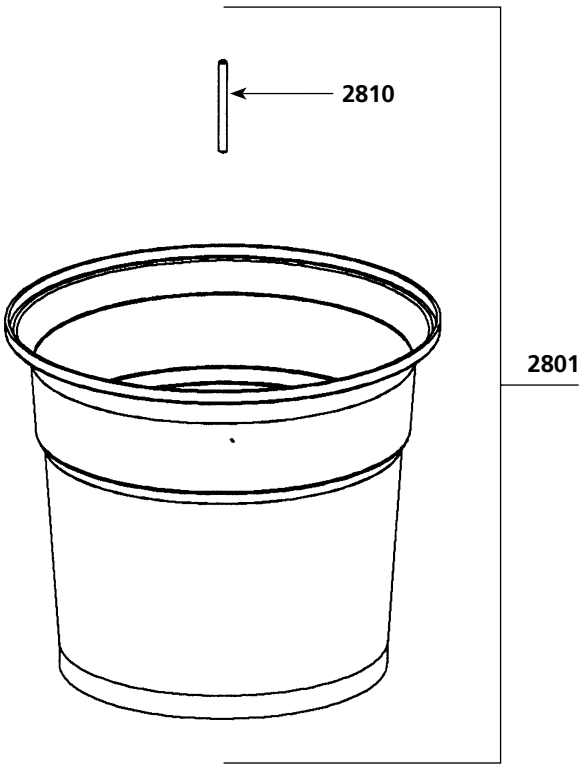

IMPORTANT : *Each spare part order must include the type and the number of the product which appears on the identification plate.*